PoWer MIG Series

GeKaMac®

PoWerMIG 400

Users Manual

Please Read and Understand This Manual
Before Operating The Welding Machine

www.gedik.com.tr

This machine is for internal use only.

It complies with the WEEE Directive.

This machine has been designed in accordance with the EN 60974-1 and EN 60974-10 standards.

The machine is safe when installation, operation, and maintenance are performed in accordance with the user manual and regulations. The operator and machine owner are responsible for adhering to safety rules.

Gedik Kaynak San. Ve Tic. A.Ş. assumes no responsibility for safety or CE compliance if any modifications are made to the machine or if safety rules are not followed.

This Class A equipment is not suitable for use in homes and similar residential areas where the power supply is provided by the low-voltage public electricity network.

This machine is not household waste and cannot be disposed of in the trash.

When the machine reaches the end of its service life or becomes obsolete, it must be disposed of in accordance with regulations.

COMPLIES WITH THE WEEE DIRECTIVE.

Eco Design Statement

This machine has been designed and manufactured in accordance with the requirements of the 2009/125/EC Eco Design Directive concerning the environmentally friendly design of energy-related products.

Accordingly, machines with an idle mode are as follows.

	Idle Mode
MMA	**X**
MIG	√
TIG	√
Plazma	√
SAW	**Out of Scope**

Efficiency measurements should be conducted only on the power unit. The water cooling system should be disabled. For more information on measurements and machine settings, Gedik Kaynak Sanayi ve Ticaret A.Ş. should be consulted.

Dear Customer

This instruction manual will help you get to know your new machine. Read the manual carefully and you will soon be familiar with all the many great features of your new product. Meanwhile, please remember well safety rules and operate as instruction.

If you treat your product carefully, this definitely helps to prolong its enduring quality and reliability–things which are both essential prerequisites for getting outstanding results.
Production specification may change without advance notice.
The model you purchase is:

- ☐ **PoWer MIG 400**

Please find corresponding models from the "Contents".

Important:
Please take special note of safety rules and operate as instruction in case of damage and serious injury.

AT UYGUNLUK BEYANI

EU DECLARATION OF CONFORMITY

Bu uygunluk beyanı yalnızca imalatçının sorumluluğu altında düzenlenir.

This declaration of conformity is issued under the sole responsibility of the manufacturer.

İstanbul, Turkey, 08.03.2024

İmalatçı / Manufacturer

GEDİK KAYNAK SANAYİ ve TİCARET A.Ş.

Ankara Cad. No.306 Seyhli Pendik ISTANBUL TURKIYE

Ürün / Product	ARC WELDING MACHINE
Marka-Model / Brand- Model	POWER MIG 400

Yukarıda tanımlanan beyanın nesnesi ilgili uyumlaştırılmış AB mevzuatı ile uyumludur.

The object of the declaration described above, is in conformity with the relevant union harmonisation legislation.

Direktifler / Directives 2014/30/EU & 2014/35/EU & 2009/125/EC

Uyumlaştırılmış standartlar ve uygunluğun deklare edilmesiyle ilişkili diğer referanslar.

References to the relevant harmonised standarts used and references to the other technical specifications in relation to which conformity is declared.

EN IEC 60974-1:2018+A1:2019
EN IEC 60974-10:2021

Bu ekipman, talimatlara uygun kurulduğunda, bakımı yapıldığında ve kullanıldığında belirtilen standartlara uygundur. Makine üzerinde bir değişiklik yapıldığında veya yanlış kullanımda deklarasyon geçersiz olur.

The equipment is in compliance with pertinent legislation when installed, utilized, and maintained in accordance with the enclosed instructions. This declaration will be invalid under any modification or improper use.

İmalatçı Adına imzalayan / Signed for and on behalf of:

Hatice Özel, Equipment Business Unit Director

Safety Rules

“Danger” indicates an hazardous situation imminently.It will result in death or serious injury if people not avoided.

“Warning!” indicates a hazardous situation potentially. It will result in death or serious injury if people not avoided.

“Caution” indicates a hazardous situation possibly. It will result in slight or moderate injury if people not avoided.

“Note!” indicates a situation which implies a risk of impaired welding result and damage to the equipment.

Utilization only for intended purpose

- The machine may only be used for jobs as defined by the “Intended purpose”.
- Utilization for any other purpose, or in any other manner, which shall be deemed to be “not in accordance with the intended purpose”. The manufacturer is not responsible for any damage caused by such improper use.

Safety signs

- All safety instructions and hazard warnings on the machine must remain legible and must not be removed, covered, pasted or painted.

Safety inspection

- The owner/operator is obliged to perform safety inspection at regular intervals.
- The manufacturer also recommends regular maintenance of the power supply every 3-6 months.

Electric shock can kill

- It can result in fatal electric shock or severe burns by touching live electrical parts.The electrode and work circuit is live electrically whenever the output is on. The input power circuit and the internal circuits of the machine are also charged when the power is turned on. In MIG/MAG welding, the wire, drive roll, wire feed housing and all metal parts that come into contact with the wire are live. It is dangerous for the equipment is installed or grounded improperly.
- Do not touch live electrical parts of the welding circuit, electrodes and wires with your bare skin or wet clothing.
- The operator must wear dry hole-free insulating welding gloves and body protection when welding.
- Insulate yourself from work and ground with dry insulating protection which is large enough to prevent you physical contact with the work or ground from full area.
- Connect the primary input cable according to rules. Disconnect input power or stop machine before installing or maintenance.

- If welding must be performed under electrically hazardous conditions as follow: in damp locations or wearing wet clothing; on metal structures such as floors, gratings, or scaffolds; when in cramped positions such as sitting, kneeling, or lying; or in occasion when there is a high risk of unavoidable or accidental contact with the work piece or ground. Additional safety precautions must be used: semi-automatic DC constant voltage (wire) welders, DC manual (Stick) welders and AC welders with reduced open-load voltage.
- Keep electrode holder, ground clamp, welding cable and welding machine in good and safe operating condition. Replace damaged part immediately.

Electric and magnetic fields (EMF)may be dangerous

- If electromagnetic interference is found to be occurring, it is the operator's responsibility to check for any electromagnetic problems that may occur on equipment as follow:

- Power, signal and data-transmission leads
- IT and telecoms equipment
- Measurement and calibration equipment
- Wearers of pacemakers

- Measures for minimizing or preventing EMC problems:

– Mains supply

If electromagnetic interference still occurs, despite the fact that the mains connection in accordance with the regulations, take additional measures

– Welding cables

Keep these as short as possible

Connect the work cable to the work piece as close as possible to the area being welded.

Lay term away from other cables well.

Do not place your body between your electrode and work cables.

– Equipotential bonding
– Workpiece grounding (earthing)
– Shielding

Shield the entire welding equipment and other equipment nearby.

ARC rays can burn.

- Visible and invisible rays can burn eyes and skin.
- Wear an approved welding helmet or suitable clothing made from durable flame-resistant material (leather, heavy cotton, or wool) to protect your eyes and skin from arc rays and sparks when welding or watching.
- Use protective screens or barriers to protect other nearby personnel with suitable, non-flammable screening and/or warn them not to watch the arc nor expose themselves to the arc rays or to hot spatter or material.

Fumes and gases can be dangerous

- Welding may generate fumes and gases which can be hazardous to your health if inhaled.
- Keeping your head out of the fume when welding. If inside, ventilate the area at the arc to keep fumes and gases away from the breathing zone. If ventilation is not good, please wear an approved air-supplied respirator.
- Work in a confined space only if it is well ventilated, or while wearing an air-supplied respirator.
- Welding fumes and gases can displace air and lower the oxygen level causing injury or death. Always use enough ventilation, especially in confined areas, to insure breathing air is safe.Welding fumes and gases can displace air and reduce oxygen levels, which can lead to injury or death. Always use adequate ventilation, especially in confined areas, to ensure the air is safe to breathe.

Welding and cutting sparks can cause fire or explosion.

- Make sure the electrode circuit is not touching the workpiece or ground when not welding. Accidental contact can cause sparks, explosion, overheating, or fire. Make sure the area is safe before doing any welding.
- Welding and cutting on closed containers, such as tanks, drums, or containers, can cause them to blow up. Make sure proper steps have been taken.
- When using pressurized gases in the workplace, special precautions are required to prevent hazardous situations.
- Connect work cable to the work as close to the welding zone as practical to prevent welding current from passing too long and creating fire hazards or overheat.
- Wear oil-free protective garments such as leather gloves, heavy shirt, cuffless trousers, high shoes, and a cap. Wear ear plugs when welding out of position or in confined places. Always wear safety glasses with side shields when in a welding area.
- Be attention that welding sparks and hot materials from welding can go through small cracks easily and openings in nearby areas and start a fire. Remove fire hazardous from the welding area, if not possible, cover them thoroughly. Do not weld where flying sparks can strike flammable material and where the atmosphere may contain flammable dust, gas, or liquid vapors (such as gasoline).
- Protect yourself and others from flying sparks and hot metal.Remove any combustibles from the operator before any welding.
- Have a fire extinguisher ready at all times.
- Empty containers, tanks, drums, or pipes which have combustibles before welding.
- Remove stick electrode from electrode holder or cut off welding wire at contact tip when not in use.

- Apply the correct fuses or circuit breakers. Do not oversize or bypass them.

Cylinder can explode if damaged.

- Pressure gas cylinders contain gas under high pressure. If damaged, a cylinder can explode. Since gas cylinders are part of the welding process normally, be sure to treat them carefully.
- Cylinders should be located away from areas where they may be struck or subjected to physical damage. Use proper equipment, procedures, and sufficient number of persons to lift and move cylinders.
- Always install cylinders in an upright position by securing to a stationary support or cylinder rack to prevent falling over or tipping.
- Keep a safe distance from arc welding or cutting operations and any other source of heat, sparks, or flame.
- No touching cylinder by welding electrode, electrode holder or any other electrically “hot” parts. Do not drape welding cables or welding torches over a gas cylinder.
- Keep them and associated parts in good condition by only use correct compressed gas cylinders, regulators, hoses, and fittings designed for the process used.
- Use only compressed gas cylinders containing the correct shielding gas and a regulator designed for proper operation for the gas and pressure used. All hoses, fittings, etc. should be suitable for the application and in good condition.
- Open the cylinder valve slowly and keep your head and face away from the cylinder valve outlet.
- Valve protection caps should be kept in place over valve expect when the cylinder is in use or connected for use.

Hot parts can burn

- Do not touch hot parts with bare hand or skin.
- Ensure equipment is cooled down before working.
- If touching hot parts is needed, use proper tools and/or wear heavy, insulated welding gloves and clothing to prevent burns.

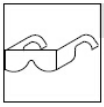

Flying metal or dirt can injure eyes

- It can hurt your eyes when welding, chipping, wire brushing, and grinding cause sparks and flying metal.
- Remember wear appropriate safety glasses with side shields when in welding zone, even under your welding helmet.

Noise can damage hearing

- Noise from some processes or equipment can damage hearing.
- Remember wear approved ear protection to protect ears if noise level is high.

Moving parts can injure

- Stay away from moving parts such as fans.
- Stay away from pinch points such as drive rolls.
- Keep all doors, panels, covers, and guards closed and securely in place.
- Only qualified personnel should remove doors, panels, covers or guards for service and maintenance.
- Reinstall doors, panels, covers, or guards when servicing and maintenance is finished and before reconnecting input power.

Overuse can lead to overheating

- Use machine follow duty cycle. Reduce current or reduce duty cycle before starting to weld again.
- Allow cooling period.
- Do not block or filter airflow to unit.

Safety markings

Equipment with CE-markings meets the basic requirements of the Low-Voltage and Electromagnetic Compatibility Guideline (e.g. relevant product standards according to EN 60974).

Safety markings

Equipment with CCC markings meets the requirements of implementations rules for China compulsory certification（e.g. relevant product standards according to GB/T 15579）.

Safety markings

CSA marked equipment meets the requirements of the North American market safety certification implementation rules (e.g. relevant product standards according to CAN/CSA-E60974,ANSI/IEC 60974)

CONTENT

1- GENERAL REMARKS 8
1-1 Power source features 8
1-2 Functional principle 8
1-3 Output characteristics 9
1-4 Duty cycle 9
1-5 Applications 10
1-6 Warning label 10
2-VERSIONS BRIEFS 11
3-BEFORE COMMISSIONING 11
3-1 Utilization for intended purpose only 11
3-2 Machine installation rules 11
3-3 Power source connection 11
3-4 Welding cables instruction 12
4-PoWer MIG 400 13
4-1 System components 13
4-2 Basic equipments for welding 13
4-3 Control panel 14
4-4 Interface 17
4-5 Installation 18
4-6 Technical data 21
4-7 Dimension 21
4-8 Disassembly and reassembly 22
5-TROUBLE SHOOTING 25
6-CARE AND MAINTENANCE 26

1- GENERAL REMARKS

This series welding machines apply IGBT soft switch inverter technology,the power source enjoys highly stable welding voltage against the fluctuation of power grid and arc length change. The internal control system achieves precise control of welding process to ensure optimal welding results.

1-1 Power source features

Highlights as follows:

- Enjoy reasonable static characteristic and sound dynamic characteristic
- Less spatter due to the advanced waveform control technology
- Continuous adjustment of welding current and voltage with wide range
- 2 step / 4step
- Perfect functions of starting arc and reducing melting ball while stopping arc
- Multiple security functions
- Stable wire feeding due to the highly stable power supply from wire feeding circuit
- Light weight, small size, ideal for portable applications
- Capable of operation with extended 50 meters long welding cable

1-2 Functional principle

This series of power sources adopt IGBT soft switch inverter technology to improve the dynamic response rate and make the machines with small size and light weight. The control circuit's closed-loop control makes the power source enjoy strong ability against power grid fluctuation and perfect welding performance.

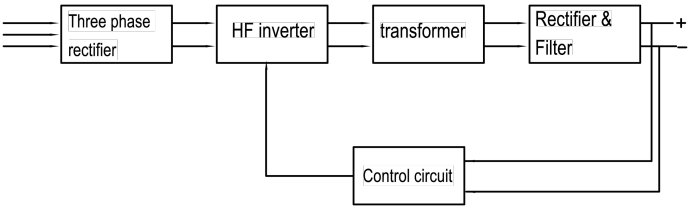

Fig.1-2-1: Schematic diagram

1-3 Output characteristics

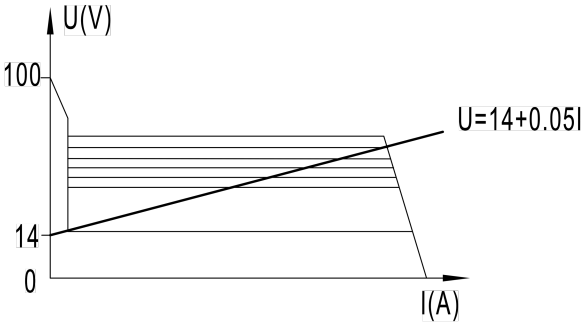

Fig.1-3-1: Output characteristics

1-4 Duty cycle

Duty cycle is percentage of 10 minutes that a machine can weld at rated load without overheating. If overheats, thermostat(s) will open, output stops. Wait for fifteen minutes for the machine to cool down. Reduce amperage or duty cycle before welding.

Note! Exceeding duty cycle can damage the machine and greatly reduce its lifespan.

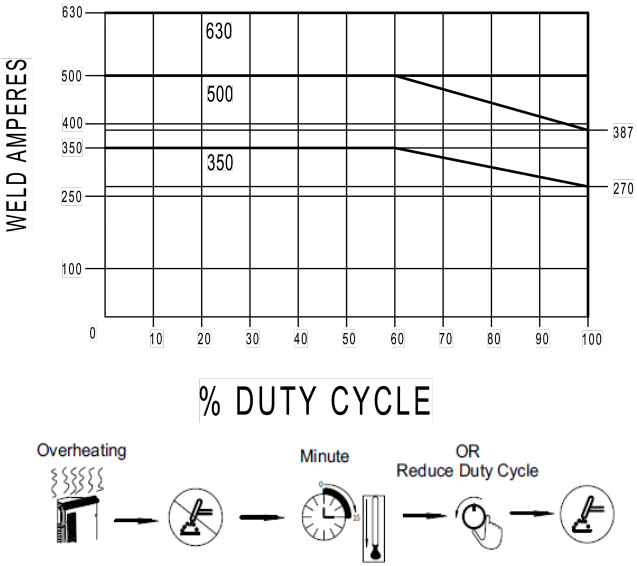

Fig.1-4-1: Duty cycle

1-5 Applications

Recommended areas of use as follows:

- Automobile and car manufacture industry
- Chemical structure and engineering
- Shipbuilding and offshore engineering
- Electric power construction
- Vehicle manufacturing
- Mechanical industry
- Other industries

1-6 Warning label

The warning label is affixed on the top of machine.

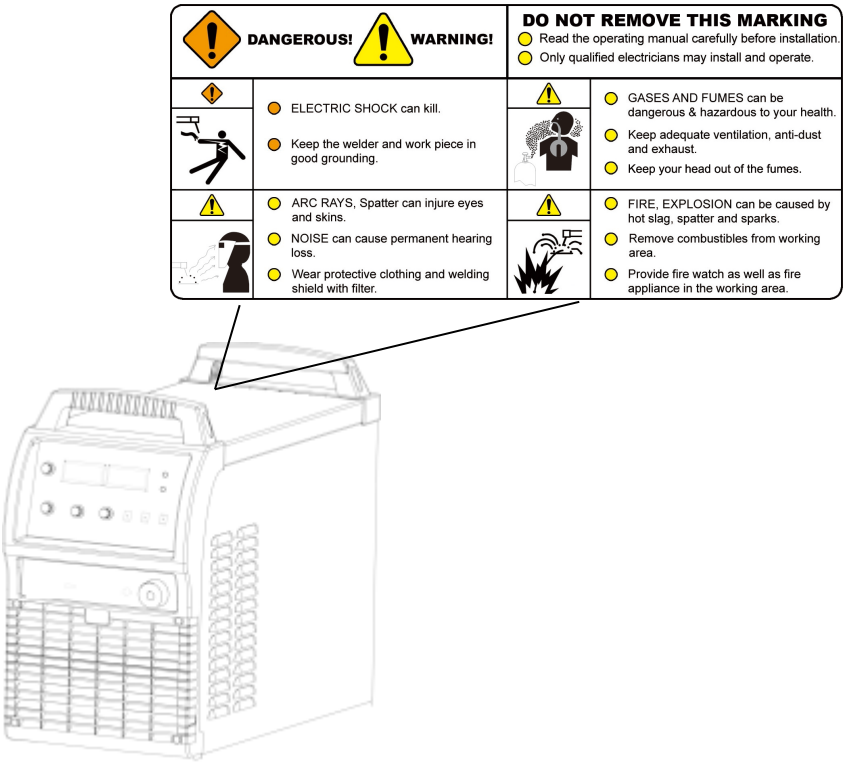

Fig. 1-6-1: Warning label

2-VERSIONS BRIEFS

Professional welding of special materials requires special welding parameters. Different models of the power sources are matched to different weldings.

- **PoWer MIG 400**

Standard operation panel, easy to operate.The rated welding current degree is 350A for this series.

3-BEFORE COMMISSIONING

Warning! Operating the equipment incorrectly can cause serious injury and damage. Do not use the functions described here until you have read and completely understood “safety rules”.

3-1 Utilization for intended purpose only

The power source may only be used for MIG/MAG. Utilization for other purposes, or in any other manner, shall be deemed to be "not in accordance with the intended purpose". The manufacturer shall not be liable for any damage resulting from such improper use.Operate, inspect and maintain should follow all the instructions given in this manual.

3-2 Machine installation rules

According to test, protection degree of this power source is IP23. However, the internal key components must be protected from direct soaking.

Warning! A machine that topples over or falls from its stand can cause injury. Place equipment on an even, firm floor in such a way that it stands firmly.

The venting duct is very important for safety protections. When choosing the machine location, make sure it is possible for the cooling air to freely enter and exit through the louvers on the front and back of machine. Any electro conductive metallic dust like drillings must not be allowed to get sucked into the machine.

3-3 Power source connection

- The power source is designed to run on the voltage given on the nameplate.
- The mains cables and plugs must be mounted in accordance with the relevant technical standards.
- The power supply sockets that come with power source are designed to use

strictly according to the marked voltages.

Note!Inadequately dimensioned electrical installations can lead to serious damage. The mains lead, and its fuse protection, must be dimensioned in accordance with the local power supply. The technical data shown on the nameplate shall apply.

3-4 Welding cables instruction

When welding, please pay attention to the followings:

a. The welding cables should be kept as short as possible;

b. If extended cable is used, please do as shown in Fig. 3-4-1.

Wrong Coil the excess ground cable and welding cable in same direction respectively.	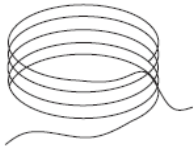
Correct Straighten the ground cable and welding cable and make them close to each other. Bundle the ground cable and welding cable together, running the wires close to the ground.	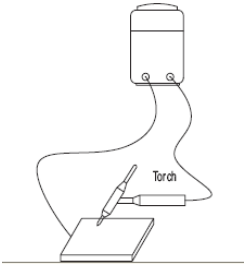
Correct When the excess cables are only be used by rolling up, coil the cables to two windings in reverse direction and overlap them. The number of turns for A is same as the number for B. Handle the welding cable and ground cable according to above-mentioned method.	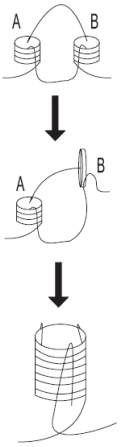

Fig. 3-4-1: Welding cables instruction

4 -PoWer MIG 400

4-1 System components

Only be equipped with the necessary accessories, can the power source operate well. The following is the needed accessories list.

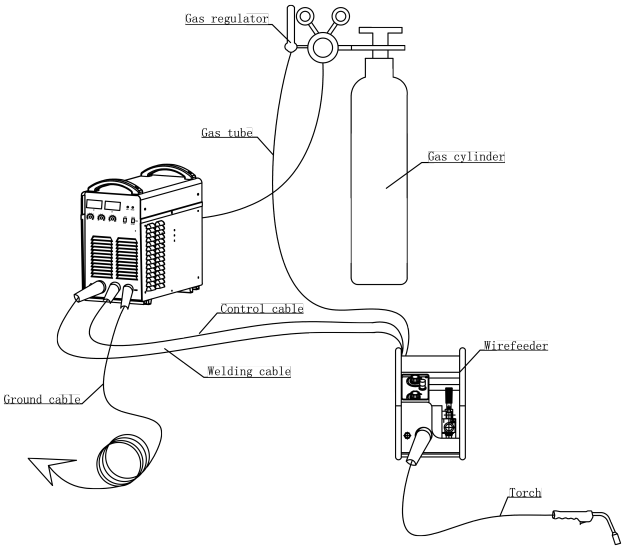

Fig. 4-1-1: System components

4-2 Basic equipments for welding

Only be equipped with the necessary accessories, can the power source operate well. The following is the needed accessories list.

CO2/MAG welding

- Power source
- Ground cable
- MIG/MAG welding torch
- gas regulator, gas hose, gas cylinder (to supply the machine with shielding gas)
- Wire feeder
- Welding cable
- Control cable
- Welding wire

4-3 Control panel

The control panel is easy to operate. Operators can select various processes by control switch and adjust welding parameters by potentiometer.

Note! Some described parameters in this manual may be slightly different from the power source, some identification may be slightly different from power source identification, but the manner of working is the same.

Warning! Operating the equipment incorrectly can cause serious injury and damage. Do not use the functions described here until you have read and completely understood all content of this manual.

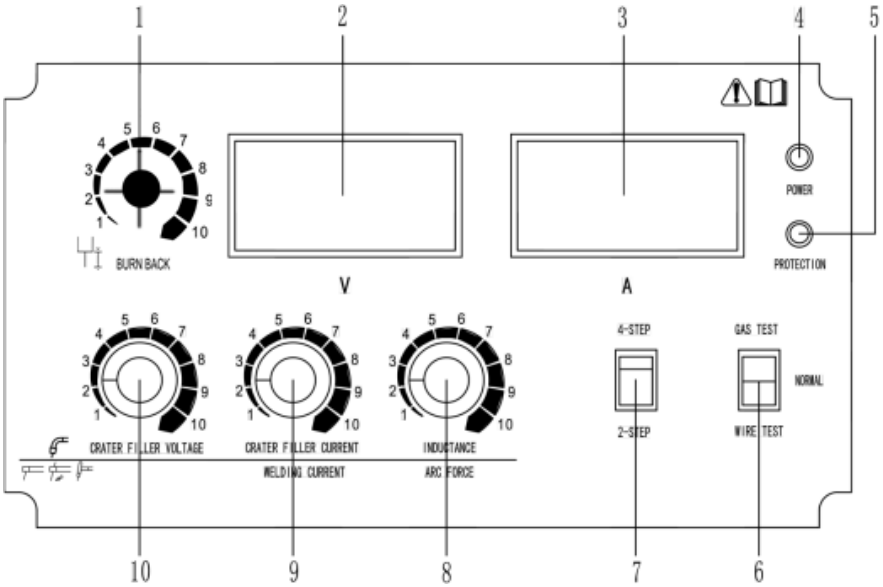

Fig. 4-3-1: Control panel

1.Burn back time control knob

To change the burn back time.

If too long time, the wire will burn back too much with too large melting ball at the end of wire; if too short time,the wire will stick with the work piece.

2.Voltage display

When in standby, display preset voltage value: 14-50;

When press torch trigger, display open load voltage 50~90VDC±10% ;

During welding, display actual voltage value;

When disconnected from control cable of wire feeder, displayed value will be higher:

70-90.

3.Current display

When in standby, display preset current value: 3-100; During welding, display actual current value;

When disconnected from control cable of wire feeder, displayed value will be higher: 150-180.

4.Power indicator

Indicate whether the welding machine is power on or not.

5.Protection indicator

During normal welding, the indicator is off;

Indicator lights up and machine will automatically stop working if the power source overheats. Do not cut off the power supply if machine come into overheat protection mode. Keep the fan running until the machine inner temperature recovers to normal and the overheat protection indicator is off, and then start welding after 20 minutes later.

6.Status selection switch

Gas test: when in “GAS TEST” status, the solenoid valve will on, and you can check the gas circuit and alter CO2 gas flow rate at the pressure regulator;

Wire test: when in “WIRE TEST” status, the function is the same as press the torch switch; you can check the wire feeding and gas feeding; at this time, welding machine outputs open load voltage, arc will start when wire contacts with workpiece.

Normal: can start the normal welding.

7.Torch control switch (2T/4T)

Operating mode of torch trigger

Graphic symbol

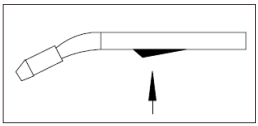

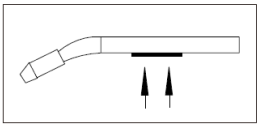

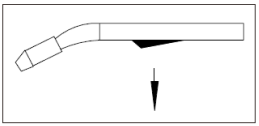

Fig. 4-3-2 Press torch trigger Fig.4-3-3 Hold torch trigger Fig.4-3-4 Release torch trigger

P03……Pre-gas time

I……..Welding current: Uniform thermal input for the preheated base metals.

P06……Crater-filler parameter: Prevent burn-through caused by too much heat at the welding ends.

P04……Post-gas time

P01……Burn back time

- 2-step mode

It is mainly used for spot welding or short weld seam welding;

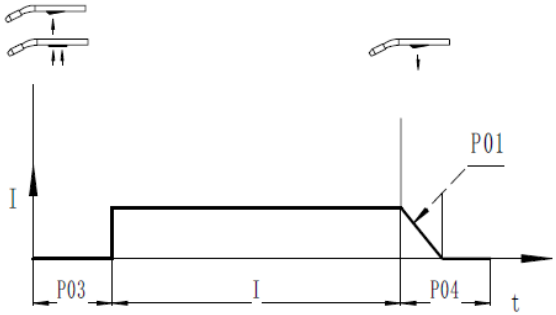

Fig. 4-3-5: 2-step mode

- 4-step mode

This mode is mainly used for long weld seam welding and process that needs crater filler welding.

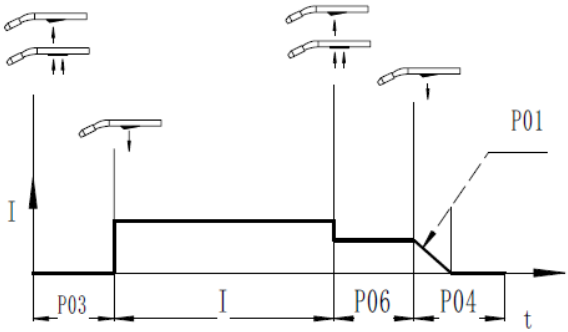

Fig. 4-3-6: 4-step mode

8.Inductance control knob

To change the welding stability, penetration and spatter;

When inductance is decreased, there will be stiff, stable arc, smaller penetration and more spatter; When inductance is increased, there will be soft arc, bigger penetration, less spatter.

9.Crater filler current control knob

In 4-step mode, it is used to preset the crater filler current.

Important! The digital meter does not display the crater filler current value when presetting. When in crater filler status, it will display the real crater filler current value.

10.Crater filler voltage control knob

In 4-step mode, it is used to preset the crater filler voltage.

Important! The digital meter does not display the crater filler voltage value when presetting. When in crater filler status, it will display the real crater filler voltage value.

4-4 Interface

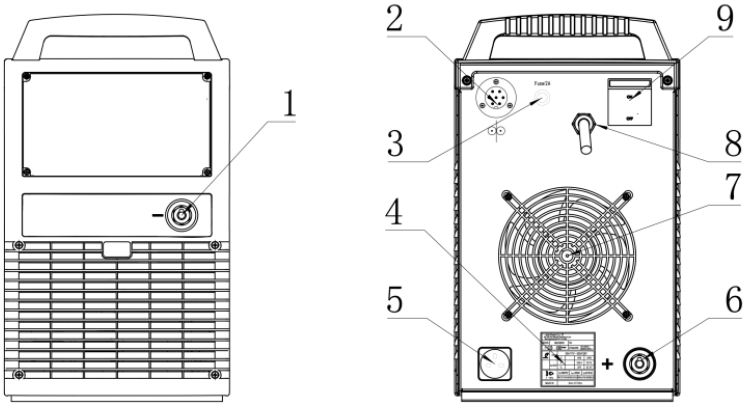

Fig. 4-4-1: Interface

1.Quick socket (-)

It is used to connect with work piece.

2.Control socket

It is used to connect with wire feeder.

3.Fuse

Control transformer fuse, protect control circuit parts.

4.Nameplate

Please refer to the nameplate for the technical parameters of the welding machine

5.Power supply socket for gas heater (AC36V)

It is used to connect the heater coil of the gas regulator.

6.Quick socket (+)

It is used to connect with wire feeder.

7.Fan

8.Power cord

Three-phase four-wire system, yellow-green wire connection ground

9.Main circuit breaker

The main circuit breaker is designed for power supply and has no over-current protection function. Please do not operate.

4-5 Installation

Warning! An electric shock can be fatal. If the machine is plugged into the mains electricity supply during installation, there is high risk of very serious injury and damage. Do not use the functions described here until you have read and completely understood “safety rules” in the beginning.Only carry out work on the machine when

- the mains switch is on turn-off position,
- the machine is unplugged from the mains.

● **Welding cable components assembly**

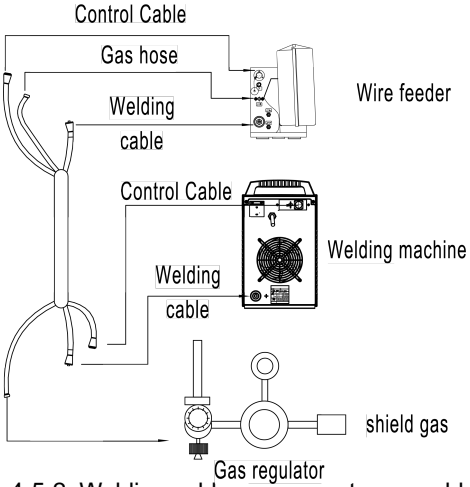

Fig. 4-5-2: Welding cable components assembly

●**Gas cylinder installation**

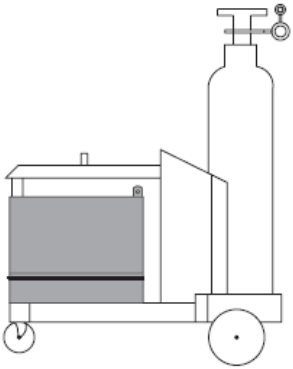

1.Stand the gas cylinder on the trolley and secure it by fixing the cylinder strap around a point in the top third of the cylinder-but never around the neck of the cylinder.

2.Take the protective cap off the gas cylinder.

3.Gently turn the gas-cylinder value anticlockwise, and blow off any dust and dirt.

4.Screw the pressure regulator onto the gas cylinder and tighten it.

5.Connect the shielding-gas connector to the pressure regulator.

Fig. 4-5-3: Gas cylinder installation

● **Mounting the torch**

To ensure normal welding, please make sure that the wire diameter, contact tip, welding torch, welding wire tube are matched to each other.Choose wire feeding tubes according to wires of different diameters and materials.

- Steel wire hose is suitable for hard wire, such as carbon steel wire, stainless steel wire.

For installation of steel wire feed hose

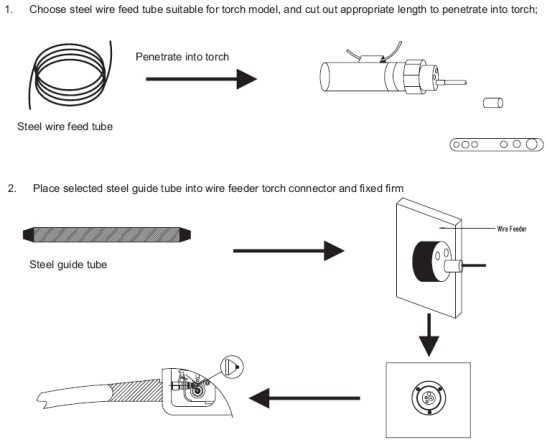

Fig. 4-5-4: Installation for steel wire feed tube

Note!If the wire hose is too tight or too loose, it will increase resistance for wire feeding and cause wire feeding unstable.

● **Installation environment requirements**

1. It should be placed indoors without direct sunlight, rainproof, low humidity and less dust. The ambient air temperature range is -10℃~+40℃.
2. The inclination to the ground should not exceed 10°.
3. There should be no wind in the welding station, if any, it should be covered.
4. The welding machine is more than 20cm away from the wall, and the distance between the welding machine is more than 10cm.
5. When using water-cooled welding torch, pay attention to anti-freezing.

● **Power supply and cable requirement**

Please note the size of fuse and circuit breaker in the table below are for reference only.

Model		PoWer MIG 400
Power supply		3 phase, AC400V ±10%, 50/60Hz
Min. power (KVA)	Power network	22
	Generator	30
Input protection (A)	Fuse	30
	Circuit breaker	32
Cable size (mm²)	Input cable	≥2.5
	Output cable	35
	Protective GND wire	≥2.5

Table4-5-1: Power supply and cable requirement

Note! Welding machine must be taken special design if it is powered by generator, please contact with manufacturer if you have such needs.

● **Connections of power cord and distribution box**

Warning! -Avoid hot-line work

- Operating by professional electrician
- Avoid connecting two power sources to one breaker
- Please refer to Table 4-5-1 to check if standard of input voltage, breaker and input cable is suitable.

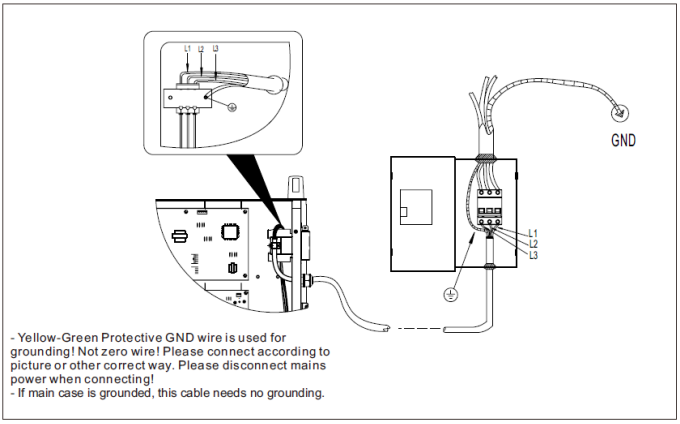

Fig. 4-5-4: Connections of power cord and distribution box

4-6 Technical data

Model	PoWer MIG 400
Voltage/Frequency (3~)	AC400V±10％,50/60Hz
Rated input power (KVA)	12.7
Rated input current(A)	19.3
Range of current(A)	60~350
Range of voltage(V)	14~40
OCV(V)	70
Duty cycle (%)	≥89
Full-load efficiency(%)	≥0.87
Wire diameter (mm)	Φ0.8~Φ1.2
Gas flow(L/min)	10~25
Dimension(mm^3)	660×320×560
Weight (Kg)	40
Isolation degree	H
IP class	IP23

Table 4-6-1: Technical data

4-7 Dimension

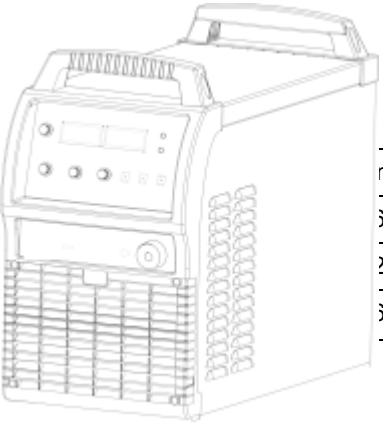

nit(mm)	Unit(inches)
60	26
20	12.6
60	22

Fig. 4-7-1: Dimension

Table. 4-7-1: Dimension

4-8 Disassembly and reassembly

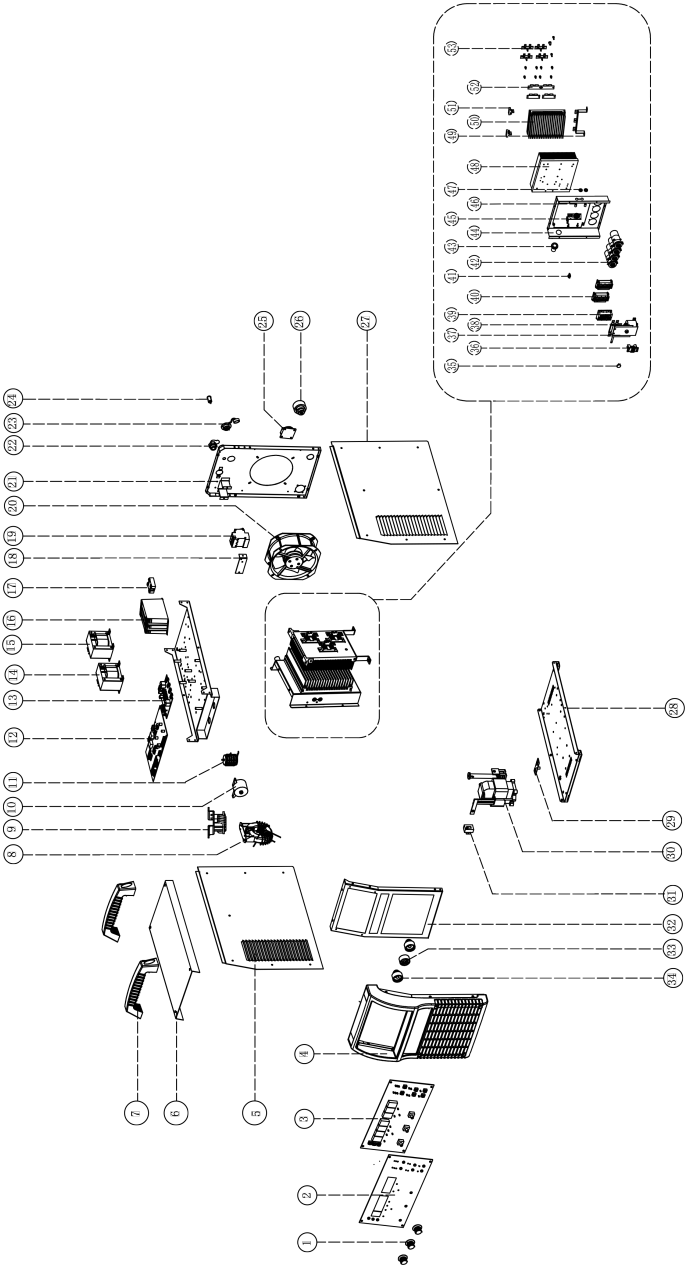

Fig. 4-8-1: Disassemble and reassembly

No.	Item	Stock No.500	REMARKS
1	Left plate	262017-00557	
2	Top plate	262029-00387	
3	Handle	766003-00138	
4	Resonance capacitor	722001-00074	
5	Main transformer	220629-00023	
6	Resonance inductor	220521-00004	
7	Main control board	220580-01716	
8	Power transformer I	763001-00048	
9	Drive board	210310-00108	
10	Power transformer II	763001-00049	
11	Input anti-common mode inductance	220467-00002	
12	Circuit breaker	745011-00021	
13	Fan	746001-00087	
14	Rear plate	262011-01126	
15	Cable	769001-00026	
16	Fan cover	746003-00024	
17	Right plate	262023-00544	
18	Filter capacitor	722001-00070	
19	Bottom plate	263065-00242	
20	capacitor	722001-00062	
21	Output reactor	763004-00158	
22	Shunt	720041-00008	
23	Potentiometer	720031-00042	
24	Potentiometer	720031-00041	
25	Front panel	262005-01261	
26	Rocker switch	745002-00002	
27	Rocker switch	745002-00003	
28	Light（red）	715002-00026	
29	Light（yellow）	715002-00025	
30	Assembly type cable socket	740004-00053	
31	Control socket	740002-00027	
32	Digital display	755001-00023	

33	Potentiometer knob	720031-00138	
34	Current transformer	220149-00016	
35	Varistor	720021-00017	
36	Three phase rectifier module	735005-00002	
37	Polypropylene capacitor	722001-00067	
38	IGBT protection board	220005-00022	
39	IGBT module	735007-00048	
40	Temperature relay	745008-00042	
41	Input filter inductor	220479-00002	
42	Current exchange inductor	220281-00008	
43	Fast recovery diode module	735006-00029	
44	Diode protection board	220455-00002	
45	Radiator connecting plate	775004-00033	
46	Radiator support frame	766002-00085	
47	Rack Capacitor Board	220293-00008	

Table4-8-1: Main components list

5-TROUBLE SHOOTING

Warning! An electric shock can be fatal. Before doing any work on the machine:

-Switch it off and unplug it from the mains;

-Put up a clearly legible and easy-to-understand warning sign to stop anybody inadvertently switching it on again;

-Check to make sure the electrically charged components (e.g.capacitors) have been discharged;

-Bolts in machine case also work for ground connection. Never use other bolt that can not work for ground connection.

Note! The flowing troubles and causes are uncertain. However, during the process of MIG and the normal using conditions, that might happen.

● **Trouble shooting**

Note! The flowing troubles and causes are uncertain. However, during the process of MIG Pulse and the normal using conditions, that might happen.

No.	Problem	Cause	Remedy
01	No display after power on	1.Default phase 2.Circuit breaker on rear board is damaged 3.Fuse is broken	1.Check power supply 2.Replace 3.Replace (2A)
02	Circuit breaker trips immediately after the machine is power on	1.Circuit breaker fault 2.IGBT module is damaged 3.Three-phase rectifier bridge is damaged 4.Varistor is damaged	1.Replace 2.Replace IGBT module and drive board 3.Replace 4.Replace
03	Circuit breaker trips during welding	1.Machine long time overload working 2.Circuit breaker is damaged	1.Use as rated duty cycle 2.Replace
04	Welding current is not adjustable	1.Wire feeder control cable is broken or controller is damaged 2.Control board is damaged 3.Current sensor in welding machine is damaged or its cable is broken	Replace
05	Arc is unstable, large spatter	1.Improper welding standard 2.Contact tip is serious worn	1.Adjust properly 2.Replace

06	CO2 gas regulator does not heat	1.CO2 gas regulator fault 2.Heating cable is broken or short circuit 3.Thermistor of heating power source is damaged	1. Replace 2.Repair 3.Replace
07	Press torch trigger, wire feeding is normal, but no gas comes out from torch	1.Control board is damaged 2.Solenoid valve is damaged 3.Control cable is broken	1.Replace 2.Replace 3.Re-connect
08	Press torch trigger, wire feeder does not work, no open circuit voltage indication	1.Torch trigger is damaged 2.Wire feeder control cable is broken 3.Control board is damaged	1.Replace 2.Repair 3.Replace

Table5-2: Trouble shooting

6-CARE AND MAINTENANCE

● **Before open the machine**

Warning! An electric shock can be fatal. Before doing any work on the machine:

-Switch it off and unplug it from the mains.

-Put up a clearly legible and easy-to-understand warning sign to stop anybody inadvertently switching it on again.

-Check to make sure the electrically charged components (e.g.capacitors) have been discharged.

-Bolts in machine case also work for ground connection. Never use other bolt that cannot work for ground connection.

● **Maintenance**

Please follow the instructions as below to ensure normal lifespan of power source.

Conduct safety check at regular intervals (see “Safety rules”)

- Dismantle machine side panels and clean machine inside with clean and low-pressure compressed air by professional technician, not less than twice per year. Clean the components at a certain distance only;

- If a lot of dust has accumulated, clean the cooling-air ducts.

● **Maintenance of water-cooled welding torch**

For water-cooled welding torch:

- Check the connections of water cooling system
- Check the coolant level and cleanliness(clean coolant only)
- Frequently check coolant’s back flow state

● **Daily maintenance**

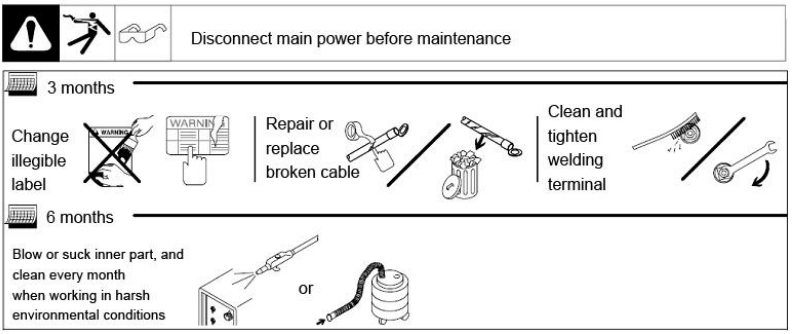

Fig. 6-1: Daily maintenance

No.	Item	Stock No. 400	Stock No. 500	Stock No. 630	MIG 400	MIG 500	Stock No. 630
1	Left plate	262017-00557	262017-00579	262017-00629		6064200480	
2	Top plate	262029-00387	262029-00412	262029-00467		6064200481	
3	Handle	766003-00138	766003-00138	766003-00138	6064200129	6064200129	6064200129
4	Resonance capacitor	722001-00073	722001-00074	722001-00075	6064100180	6064100154	
5	Main transformer	220629-00023	220629-00015	220629-00016	6064100254	6064100187	6064100373
6	Resonance inductor	220521-00007	220521-00004	220521-00005	6064100179	6064100156	6064100371
7	Main control board	220580-01906	220580-01699	220580-01144			
8	Drive board	210310-00108	210310-00096	210310-00096	6064000473	6064000451	6064000451
9	Power transformer I	763001-00048	763001-00048	763001-00048	6064100513	6064100513	6064100513
10	Power transformer II	763001-00049	763001-00049	763001-00049	6064100514	6064100514	6064100514
11	Filter	752004-00017	752004-00017	752004-00017	6064000421	6064000421	6064000421
12	Current transformer	220149-00016	220149-00010	220149-00007	6064100198	6064100185	6064100372
13	Circuit breaker Pressure plate	766003-00187	766003-00187	766003-00195	6064200482	6064200482	
14	Circuit breaker	745011-00021	745011-00022	745011-00026	6064200438	6064200131	6064100365
15	Fan	746001-00087	746001-00087	746001-00035	6064100525	6064100525	6064000358
16	Rear plate	262011-01126	262011-00813	262011-00803			
17	Cable	769001-00026	769001-00028	769001-00093			
18	Heating socket	740004-00358	740004-00358	740004-00039			
19	Fan cover	746003-00024	746003-00024	766003-02403			
20	Right plate	262023-00544	262023-00565	262023-00614			
21	Filter capacitor	722001-00070	722001-00070	722001-00070	6064100163	6064100163	6064100163
22	Input capacitor bracket	766002-00103	766002-00103	766002-00103			
23	Bottom plate	263065-00242	263065-00170	263065-00127			
24	Rack Capacitor Board	220293-00008	220293-00008	220293-00008	6064000207	6064000207	6064000207
25	capacitor	722001-00062	722001-00062	722001-00062	6064100162	6064100162	6064100162
26	Filter capacitor clip	766003-00247	766003-00248	766003-00248			
27	output reactor	763004-001158	763004-00228	763004-00116			
28	Shunt	720041-00008	720041-00010	720041-00010			
29	Potentiometer	720031-00041	720031-00041	720031-00041			
30	Potentiometer	720031-00042	720031-00042	720031-00042			
31	Potentiometer	720031-00158	720031-00158	--			
32	Front panel	262005-01261	262005-01212	262005-01089			
33	Light（red）	715002-00026	715002-00026	715002-00026	6064200486	6064200486	6064200486
34	Light（yellow）	715002-00025	715002-00025	715002-00025	6064200487	6064200487	6064200487
35	Digital display	755001-00023	755001-00023	755001-00023	6064000461	6064000461	6064000461
36	Potentiometer knob	720031-00138	720031-00138	720031-00138	6064200488	6064200488	6064200488
37	Potentiometer knob	720031-00138	720031-00138	--			
38	Rocker switch	745002-00002	745002-00002	745002-00002	6064200489	6064200489	6064200489
39	Rocker switch	745002-00003	745002-00003	745002-00003	6064200490	6064200490	6064200490
40	Assembly type cable socket	740002-00027	740002-00027	740002-00027	6064200534	6064200534	6064200534
41	Control socket	740001-00047	740001-00047	740003-00047	6064200137	6064200137	6064200137
42	Varistor	720021-00017	720021-00017	720021-00017	6064100167	6064100167	6064100167
43	Three phase rectifier module	735005-00002	735005-00003	735005-00003	6064100220	6064100168	6064100168
44	Polypropylene capacitor	722001-00067	722001-00067	722001-00014	6064100169	6064100169	
45	IGBT protection board	220005-00022	220005-00135	220005-00008	6064000205	6064100612	

46	IGBT module	735007-00048	735007-00038	735007-00073	6064100170	6064100175	6064100604
47	Temperature relay	745008-00042	745008-00045	745008-00044	6064100613	6064100578	
48	Input filter inductor	220479-00002	220479-00002	220479-00004	6064100171	6064100171	
49	Radiator bracket	766002-00090	766002-00090	766002-00090	6064200149	6064200149	6064200149
50	IGBT Radiator	264005-00028	264005-00090	264005-00088		6064200148	
51	Diode Radiator	264011-00121	264011-00116	264011-00027		6064200491	
52	Current exchange inductor	220281-00008	220281-00008	220281-00012	6064100227	6064100227	6064100378
53	Fast recovery diode module	735006-00029	735006-00029	735006-00029	6064100173	6064100173	6064100173
54	Diode protection board	220455-00002	220455-00002	220455-00002	6064000200	6064000200	6064000200
55	Radiator connecting plate	775004-00033	775004-00027	775004-00009			
56	Radiator support frame	766002-00091	766002-00078	766002-00079			

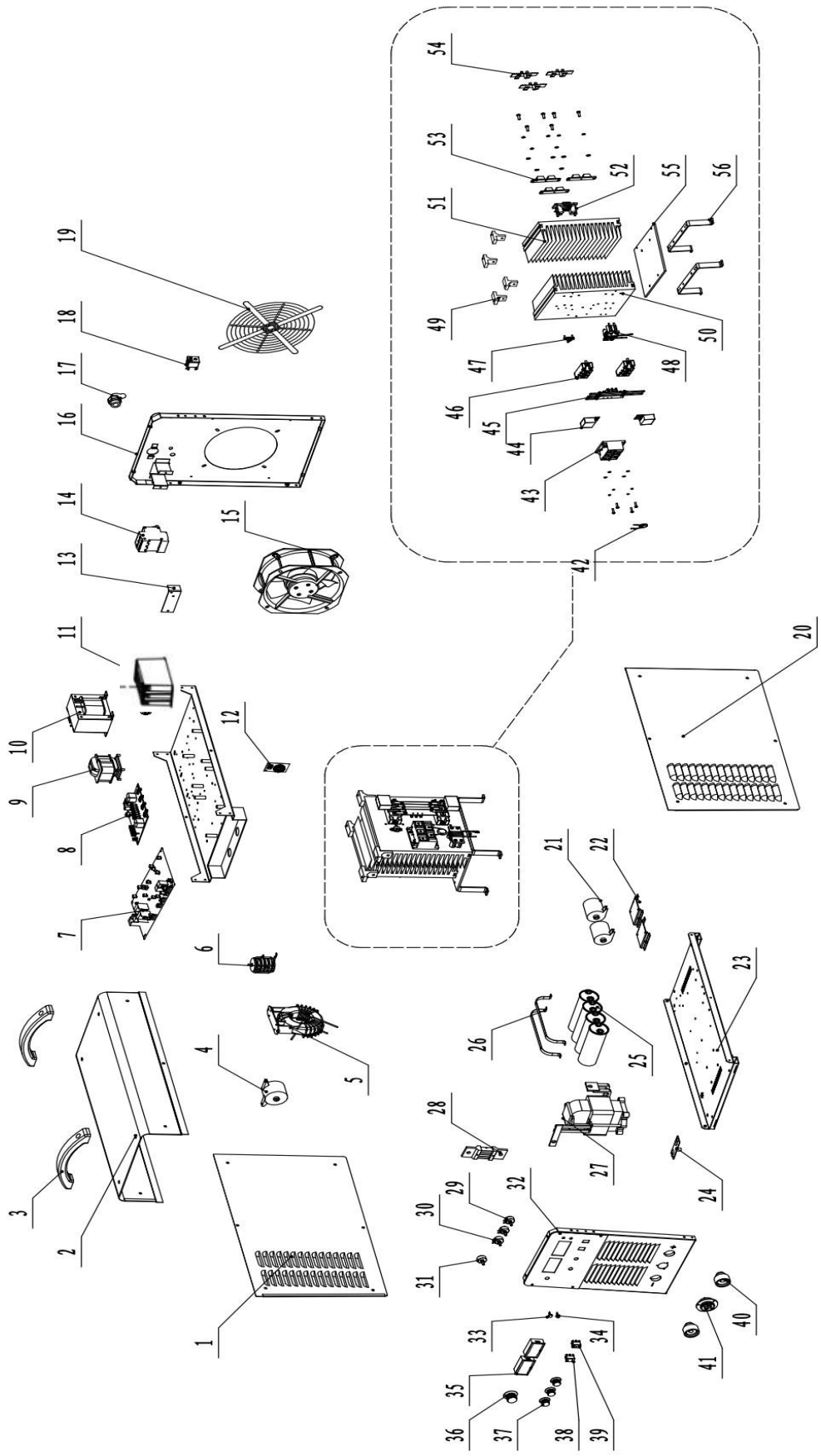

Manufacturer

Üretici: Shandong Aotai Electric Co., LTD.
Üretici Adresi: 282 Bole Ave, High-tech Development Zone, Jinan, Shandong 250101, P.R. China
İletişim bilgileri:
Tel: +86-531-81921006
Fax: +86-531-88876665

Importer
İthalatçı: Gedik Kaynak San ve Tic A.Ş.
İthalatçı Adresi: Ankara Cad No: 306 Seyhli 34906 Pendik, İstanbul/Türkiye
İletişim Bilgileri:
Tel: +90-216-3785000
Fax: +90-216 3782044

PoWer MIG Series

GeKaMac®

Gedik Welding Inc.
Ankara Caddesi No: 306 Şeyhli 34906 Pendik - İstanbul / Turkey
P. +90 216 378 50 00 • **F.** +90 216 378 20 44
www.gedik.com.tr